Manuscript Submitted	12.10.2022
Accepted	28.12.2022
Published	31.12.2022

Smart Bird Farm

Sahidan Abdulmana, Fauzan Mapa, Mafaizu Chewae, Akrom Tolaemah & Afwan Yama-ae
Faculty of Science and Technology
Fatoni University
sahidan.lec@ftu.ac.th

Abstract

Smart bird farm is an emerging skill to manage farms by using technologies for instance sensors, IoT (Internet of Things), robotics, and AI (Artificial Intelligence) to control and increase the quality and quantity of products while optimizing the human labor required. We can be seen in today's world, there are many organizations for example agriculture, house, office, manufacturers and etc. are developing IOT technology to automatically control their businesses and organizations. One of the issues in my region is the bird farm. When the farm owner wants to leave their farm, it is difficult for him/her to feed the food, water, turn on the light, and sound for their birds. The objective of this study is to develop a smart bird farm application for the owner to automatically control their bird farm by using IoT smart farm system. Especially, for turning on and off the bird's sound, the food, and the time of feeding the food, turn on and off the LED light sensor and automatically turn on and off of the water pump by using a water sensor. Agile project development was the method used in this study. The results show that the smart bird farm system was successful when tested and applied to the real farm. Moreover, the connection testing with the mobile application, water pump testing via water sensor, the value of micro servo testing via the mobile application, control sound testing, and food feeding testing were successful and satisfactory. A smart bird farm is one of the farmer's alternatives to reduce labor and time and comfortable for the farmer to control their farm anywhere with the internet connection and mobile technology.

***Keywords*:** *Smart farm, internet of things, sensor technology.*

1. Introduction

Technology is very significant in our daily routine because it is used in all parts of our lifetime. When someone consumes it in the long run, they will realize how significant technology is for instance when they use their mobile, drive a car, watch TV and use a computer or any kind of technology (The scientific world, 2019). Furthermore, in the last decade, technology has been improving at a rapid speed (Raja & Vyas, 2019). There are many researchers more emphasize applying technology to agriculture. This technology is called smart farming. It integrates computer technology, sensor, communication, IoT (Internet of Things), robotics, and AI for greater yield and production of vegetation (Chieochan et al., 2017, Yoon et al., 2018).

Thailand is one of the top agricultural countries in the world (Suwannarat, 2011). It has been the main part of Thailand's development and this sector has offered many occupation chances for the Thai citizen, along with the sector of services (Manakitsomboon, 2022). Agriculture refers to the cultivation of plants, livestock refers to livestock farming on land, fishery refers to the aquatic career, and forestry refers to the forestry career. Moreover, Thailand has an area of about 321 million acres or about 513,000 square kilometers. However, in southern Thailand, there is a lot of livestock. The latest figures for 2017 were 429,062 livestock farms. It includes raising dairy cows, buffalo meat, swine, chicken, ducks, goats, sheep and etc. It can be used as food and trade for a business as well.

However, one of the famous farms is the bird farm. Bird breeding is another career that can be done and get attention. It could be fed for love, beauty, or to be submitted for the competition. In addition, it included fed for breeding and trading as a business as well. Birds that are popular and can be done as the above activities is the Zebra Dove (Peaceful Dove). The bird is beautiful, and unique, there is a sweet voice. Furthermore, there is a voice competition from the regional to the international level in Thailand and neighboring countries such as Malaysia, Indonesia, Singapore and Brunei. It can also be sold at a very high prices ranging from ten thousand to a million Thai Bath.

One of the issues of the bird farmer is when they want to leave their home to somewhere for a long period. They cannot feed the food, water and turn on the light. As a result, the objective of this study is to develop a "Smart Bird Farm" for the bird farmer. It could automatically help them when they want to leave home and reduce labor costs. The development of Smart Bird Farm includes many functions which are feeding the birds food in the right amount, automatically controlling water when the water level drops, automatically turning on the lights when the sun is not enough and turning off the lights immediately when the sun's brightness, open the bird sound to stimulate birds in the cage to call out and the owner can also watch birds and listen to them right away. Those functions can be controlled remotely without having to come to the cage.

2. Internet of Things

The internet, a revolutionary invention, is always transforming into some new kind of hardware and software, making it unavoidable for anyone. As can be seen from today's world, the form of communication is either human to human or human to device, but the IoT promises a great future for the internet where the type of communication is machine to machine (M2M). The future of IoT, which will transform the real-world objects into intelligent virtual objects. Moreover, the IoT aims to combine everything in our world under a common infrastructure, giving us not only control of things around us but keeping us informed of the state of the things (Prachi et al., 2017).

Furthermore, IoT is an evolving topic of technical, social, and economic implications. Consumer products, durable goods, cars and trucks, industrial and utility components, sensors, and other everyday objects are being combined with internet connectivity and powerful data analytic capabilities that promise to transform the way we work, live, and play. Projections for the impact of IoT on the Internet and economy are impressive, with some anticipating as many as 100 billion connected IoT devices and a global economic impact of more than $11 trillion by 2025. Nevertheless, the IoT increases important challenges that could stand in the way of realizing its potential benefits. Attention-grabbing headlines about the hacking of Internet-connected devices, surveillance concerns, and privacy fears already have captured the public attention. Technical challenges remain, and new policy, legal, and development challenges are emerging (Rose et al., 2015).

3. Smart farming

Smart farming, or "intelligent farming," is a combination of modern technology with agricultural work to solve various problems. The farmers intelligent farm technology is based on the concept of modern agriculture called high precision agriculture, which is an environmentally friendly farming strategy by allowing farmers to adjust the use of resources in accordance with the conditions of most areas, including effective care. This concept can be adapted for farms, plants, and animals. The intelligent farm will have a difference from ordinary farms in that the use of that resource can be done precisely and directly to meet the needs of plants and animals. Moreover, it helps to reduce the loss of resources and get a better output that meets the needs of the caregivers.

According to Xu et al. (2014), they mentioned that the smart farm is predicated on large-scale heterogeneous sensing. Heterogeneous sensors can measure a range of modalities, and be instantiated in practice using platforms from different manufacturers comprising different hardware, protocols and algorithms. However, despite the great potential, managing heterogeneity is challenging. A common

approach is that of middleware, which offers appropriate levels of abstraction such that heterogeneity in its several dimensions can be mitigated and successfully managed (O'Grady and O'Hare, 2017).

4. Conceptual Framework

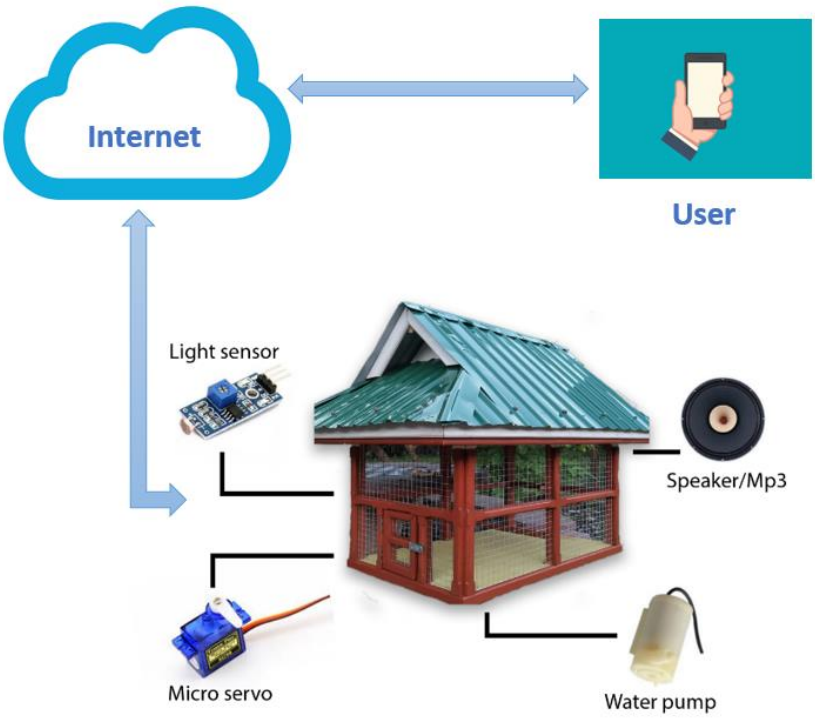

Figure 1: Conceptual framework of smart bird farm

Based on the objective of this study that is to develop a "Smart Bird Farm" for the bird farmer. Figure 1 shows the conceptual framework of the smart bird farm. With the use of mobile technology with internet connection, it's automatically help users to manage their farm when they want to leave home. The concept of developing the smart bird farm includes many functions which are feeding the birds food in the right amount, automatically controlling water when the water level drops, automatically turning on and off the lights, turn on the bird sound to stimulate birds in the cage to call out. Those functions can be controlled remotely with mobile technology.

5. Methodology

5.1 Software and hardware used

Table 1: Hardware specification

Software	Version
Arduino IDE web editor	Arduino IDE 1.85
Blynk application	2.13.3 update last month
Fritzing	Fritzing 0.9.3 b

Table 1 represents the software used to develop the smart bird farm application. There are three programs were used in this project which are Arduino IDE web editor, Blynk application, and Fritzing. Arduino IDE web editor is used to write coding for the system and use C language to develop it. Blynk application is used to be a platform to control the Arduino board and it can build a graphic interface for the application. Moreover, it is a digital dashboard where the developer can simply drag and drop widgets. Lastly, Fritzing is used to design the wiring between devices. In addition, it provides a software

tool, a community website, and services in the spirit of Processing and Arduino, patronizing a creative ecosystem that allows users to document their prototypes, share them with others, and teach electronics in a classroom (Wacksbaby, 2018). Firebase is the database that use to store data in cloud-hosted database.

Table 2: Software specification

Hardware	Version
Node MCU	Node MCU V2 WI-FI LUA Based ESP8266-12E
Breadboard	8.5 cm x 5.5 cm 400 holes 2 breadboards
Node MCU Base	Node MCU Base V. 1.0 for ESP8266 Node MCU UART WI-FI IoT Leg Extension Board Node MCU V3 ESP8266
Servo	Micro Servo TowerPro SG90 Torque 1.2-1.4 kg/cm (4.8 V)
Water pump hose	DC water pump 1 meter long
Water Sensor	Working Voltage: DC 3-5 V, Working Current: <20mA, Sensor type: Simulation, Detection area 40 mm x 16 mm, Manufacturing Process: FR4 double spray tin, Fixed Hole Size: 3.2 mm, Humanized Design: Half moon sag nonskid treatment, Working Temperature: 10 °C to 30 °C, Work Humidity: 10% to 90% without condensation Size: 65 mm x 20 mm x 8 mm, Optional Accessories: 3 pin sensor connecting, line,Arduino 328 controller,Sensor relay shield
Water Pump	Pump 6-12 VDC
Relay	Relay Module 2 Chanel 250V / 10A Active LOW
Light sensor	Ambient Light Illuminace Level Sensor Module (BH1750FVI) GY-30
LED light	Masaaki LED Light Bulb 2 Watt LED Bulb LED Bulb E27
MP3 player	Best Mini Mp3 Portable Mp3 Player MG0070-Silver

Table 2 shows the hardware used to develop the application. For the sunlight, the developer used LED Light instead of sunlight during the night. Node MCU is used as an IoT development kit. Furthermore, Light Sensor is used to measure the outside of the cage, and LED light will work when there is no sun. A water sensor is used to measure the water in the cage and Water Pump will work when the water level drops less than the value was set up. The power supply is used to turn on all power supplies. NodeMCU Base is used to install all devices on a single board. Lastly, laptops and smartphones are used for coding, designing, and testing the system.

5.2 Method used

In developing the application system, there are many types of method that can be used. One of the famous and fastest methods in developing the system is the Agile methodology. It has various types of agile methods for instance Scrum method, Dynamic System Development Model (DSDM) method, Feature Driven Development (FDD) method, Test-Driven Development (TDD) method, Extreme Programming (XP) method, and Crystal methods, etc. The different method has their own life cycle, principles, roles, advantages, and disadvantages, etc. All of these agile software development methods develop the system in repetitions and incremental processes (Anwer et al., 2017). Furthermore, each Agile method comprises a diverse combination of practices, which is an explanation of how the day-to-day process is done by the software developers. In addition, each method is diverse from the others by selecting its suitable set of practices and terminology (Abrahamsson., 2017).

This study used the Dynamic System Development Method (DSDM) of agile software development method to develop a smart bird farm. It allows rapid prototyping and enables the developer to deliver information through the process. Moreover, the project can be modified speedily to reflect the realities of new IoT technology. This study followed the life cycle of DSDM which is comprised of five steps: feasibility study, business study, functional model iteration, design and build, and implementation (Chieochan et al., 2017, Yoon et al., 2018). The implementation could provide the development of the project in systematically as shown in figure 1.

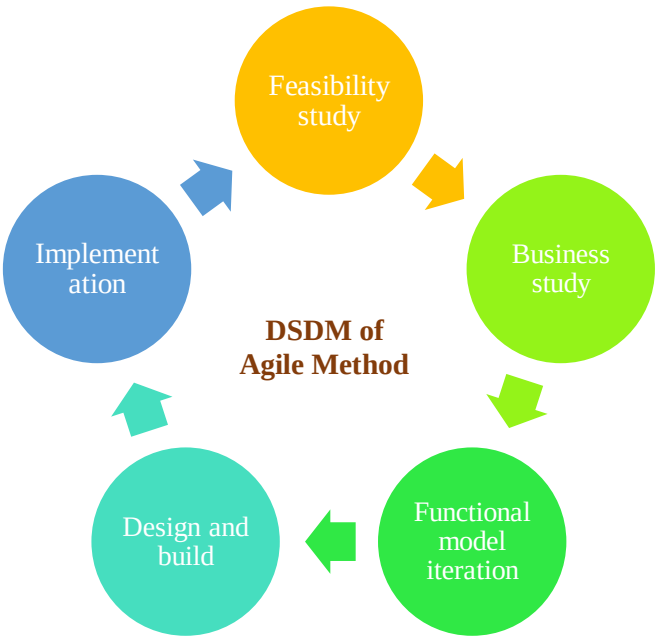

Figure 2: Dynamic System Development Method (DSDM)

Figure 2 represents the life cycle of the DSDM method to develop the system. In the feasibility study phase, the researcher observed the risk and specify the technical requirements of the mart bird farm and the problem that need to be solved by using IoT technology. Second, in a business study, the researchers have to meet for specifying the user's requirements, a list of functionalities needed in the system with its priorities, and the technology which will be applied to develop the system. Third, functional model iteration phase, the researchers define what will be developed in the software, when it will be developed, and the development way including analyzing, coding and prototyping. Forth in the designing and building phase, in order to develop and design the system following the requirements of the users, the researcher has to consider the size, convenience, and usability. The main factor in feeding bird is water and food. Therefore, all of these should have a system to solve. The developer designed to use a water sensor to control water and if water is not enough, it automates putting water by a water pump. Moreover, the developer used Board Servo to control feeding by Switch and use the light sensor to control light of the cage and if there is not enough light, it automates opening the lamp to make a light of the cage. Lastly, in the implementation phase, the developer used NodeMCU to develop an IoT system using C language. Moreover, in this phase, the software and system move from development to production and it will be handled to the users by providing the training sessions to the end users. In addition, the user manual is developed and handled. However, if the system is fulfilling all the user's requirements, then there are no other development processes are needed. If not, the whole process is redone again.

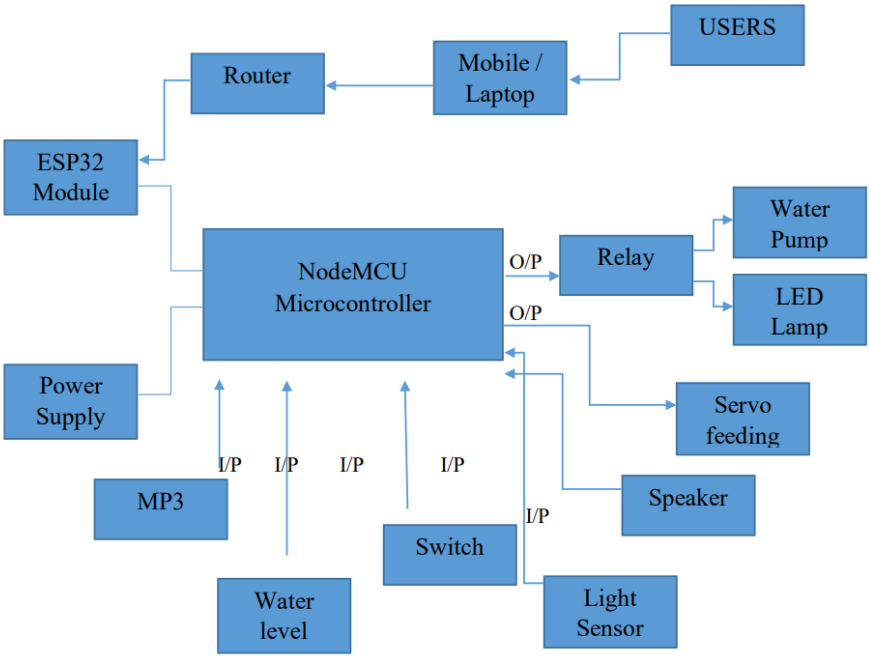

Figure 3: Functional Block Diagram of the System

Figure 3 shows the functional block diagram of the system. The developers use mobile or laptops to monitor and control all functions via internet connection. The aims of ESP8266 Module Wi-Fi are to read and send the data to a website and make an action using the same website. This board is based on ESP8266. Moreover, it integrates microcontroller capabilities and Wi-Fi in one board and it could be coded as Arduino. The default firmware offers serial communication that use to send commands to the module. These commands offer everything needed to connect with a Wi-Fi router in order to send and receive data. Then, the ESP8266 Module Wi-Fi is on Node MCU Microcontroller. It includes firmware that runs on the ESP8266 Module Wi-Fi. The power supply works on Node MCU Microcontroller and all power supplies have a power of input connection that obtains energy in the form of electric current from a source, and one or more power output connections that provide current to the load. Some power supplies have other types of inputs and outputs as well, for functions such as external monitoring and control. Therefore, all functions on Node MCU Microcontroller can work electrically by using Power Supply.

There are many functions on Node MCU Microcontroller including LED lamp, water level, LDR Photoresistor Sensor Module, and Servo. To control the water pump, the developers use the relay. It can control via smartphone using the switch to control Servo feeding. In addition, the relay can control the water pump and LED Lamp. The Water Level Sensor was used to control the water level and LDR Photoresistor Sensor Module was used to control the light. All the devices that connect with Node MCU Microcontroller must be setup with the coding.

The Graphical User Interface (GUI) in smartphones allows the user to automatically control the applications in the smart bird farm. In this proposed architecture, the developers use microcontroller ESP8266 which has Wi-Fi that is attached with it for example water level sensor, relay control water pump and LDR Photoresistor Sensor Module control LED Lamp at the field side connected to node MCU and output device, the user can use the smartphone to monitor and control the smart bird farm remotely.

Implementation is the last phase of the DSDM Method. Implementing the project can be done by coding the code on the Arduino IDE web editor and using the Blynk application to link with NodeMCU. Developers use C language to code in Arduino IDE web editor. In designing, developers use Adobe Illustrator to design hardware. Finally, when the system is completely connected with all of the above

steps, it has to test the system functionalities that are work complete or not. If there is some lack of functions, it has to fix that functions to complete them. One of the important things in developing the system is getting feedback from testers or users. After testing the functions and satisfaction, users should give feedback to the developer to adjust the system to be complete. When there is something changes, the developer should back to the first step, that is feasibility study phase then proceed to continue to the last phase. The software and hardware design need to be integrated as a complete system. System testing is required to confirm that the system integration function is run as needed. Each part of the developing the software and hardware design should be tested before integrating all parts to complete system integration. Each part should be completed the testing process to make sure that the system on that part and the function are working before move to other parts. If the errors occur in some parts, the developers should solve and correct the system. Furthermore, the system hardware is also having to complete all components. The system software has to design for all the functions for instance esp32 Wi-Fi module, wireless protocol, connection between access point and hosting server, connection between android app and hosting server to be completed for the system integration.

6. Finding & Discussion

6.1 Reliability analysis

The results show that the smart bird farm system was successful when tested and applied to the real farm. Moreover, the connection testing with the mobile application, water pump testing via water sensor, the value of micro servo testing via the mobile application, control sound testing, and food feeding testing were successful and satisfactory. There were nine users had been tested using this system as shown in table 3.

Table 3: Functional and satisfaction test from the end user

No	Functional testing	Time	Pass	Fail	Expected Result (Percentage)	Tested Result (Percentage)
1	Light	9	9	-	100 %	100 %
2	Water Pump	9	6	3	100 %	70 %
3	Micro Servo	9	9	-	100 %	100 %
4	Sound	9	9	-	100 %	100 %

Table 3 represents the functional and satisfaction test from the end users. The result from Light, Micro Servo and sound test were completed except water pump was not completely work. Finally, the developer solved that problem.

6.2 Application functionalities

The findings showed that there are four main functionalities of the smart bird farm application which are food feeding, water pump, light control and sound functions as shown in figure 4. All the functions control using Blynk application as show in figure 5 below.

Figure 4 shows the smart farm system that was controlled using the Blynk application. In the food function, the user could set up the time of feeding and the food amount. When the water level drops, the water pump function automatically controls the flow of water. Moreover, the light function is automatically turning on the lights when the sun is insufficient and turning them off immediately when the sun is sufficiently bright. Lastly, for the sound function, it will turn on the bird sound to stimulate birds in the cage to call out, and the owner can also watch the birds and listen to them right away. Figure 5 represents the application used to control the smart bird farm. The timer for feeding the food, water, sound, and light control can all be set up.

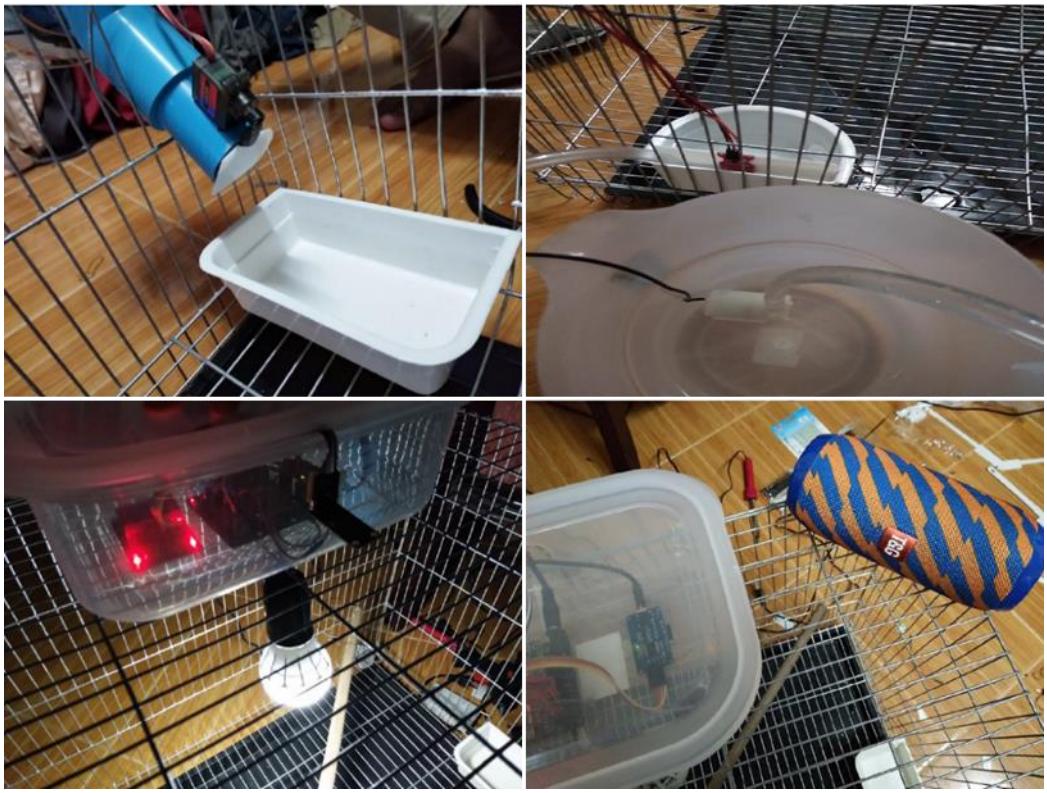

Figure 4**:** Feeding food, water pump, light sensor and sound

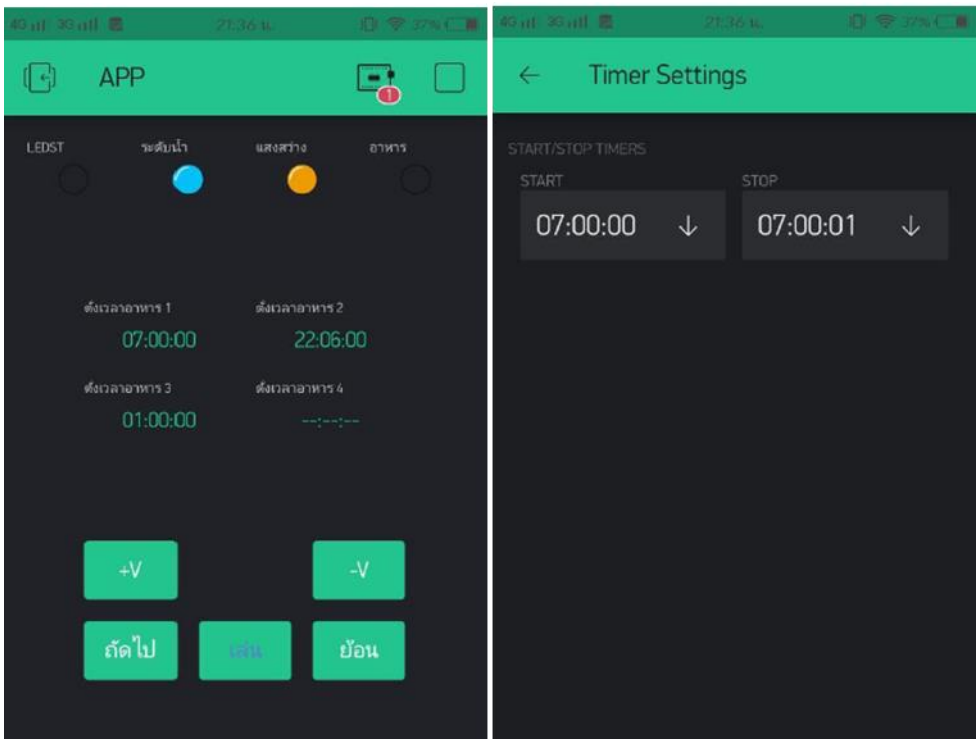

Figure 5: Blynk application

Smart bird farm is a system that requires various skills to be used. One of the significant skills is programming skill (C language). In addition, electrical skills and design skills are required. However, the development teams lacked those skills. Therefore, it requires a considerable amount of additional study time to learn and develop the system.

However, many previous studies had used IoT technology to connect smart farms. According to Astill et al. (2020), they proposed smart poultry management systems comprise precision livestock farming (PLF) technologies for instance smart sensors, automation of farm processes, and data driven decision making platforms. There were various new technologies have great implications for poultry production in the areas of the poultry house environment, bird welfare, precision feeding, and rapid detection of infectious disease. IoT was applied for communication between farm sensors, devices, and equipment, and will lead to the automation of multiple farm procedures. According to Muangprathub et al. (2019), they developed an IoT system to optimally water agricultural crops based on a wireless sensor network. There was a system that allowed the user either automatic or manual control. The automatic control uses data from soil moisture sensors for watering. Nevertheless, the user can select manual control of watering the crops in the functional control mode. Furthermore, the system can send notifications through the LINE API for the LINE application. The system was implemented and tested in Makhamtia District, Suratthani Province, Thailand.

In addition, Yoon et al. (2018) implemented a smart farm system with low-power Bluetooth and Low Power Wide Area Networks (LPWAN) communication modules, as well as the existing farm's wired communication network. Moreover, the system implemented the monitoring and control functions using the MQ Telemetry Transport (MQTT) communication method, which is an IoT-dedicated protocol, thus enhancing the possibility of the development of agricultural IoT. They suggested that for future work, they will focus on the development of environmental algorithms for optimal growth of plants using cultivated environment data and plant growth data.

7. Conclusion and Future Recommendation

IoT technology is very significant in today's world to automate and increase the value of the business, especially in agriculture and farming. This study had achieved the objectives of developing a Smart bird farms application. The functionalities tested from the end users were successful except water pump function. A smart bird farm is one of the farmer's alternatives to reduce labor, time, and comfortable for the bird farmer to control their farm anywhere with the internet connection and mobile technology. However, further study should be included camera system (CCTV) and security system in order to monitor the movement of the birds and safe from the thief.

Acknowledgement

We acknowledge to the Department of Information Technology, Fatoni University, Thailand for providing facilities for this study.

References

Abrahamsson, P., Salo, O., Ronkainen, J., & Warsta, J. (2017). Agile software development methods: Review and analysis. arXiv preprint arXiv:1709.08439.

Anwer, F., Aftab, S., Waheed, U., & Muhammad, S. S. (2017). Agile Software Development Models TDD, FDD, DSDM, and Crystal Methods: A Survey. *International journal of multidisciplinary sciences and engineering*, 8(2), 1-10.

Astill, J., Dara, R. A., Fraser, E. D., Roberts, B., & Sharif, S. (2020). Smart poultry management: Smart sensors, big data, and the internet of things. *Computers and Electronics in Agriculture*, 170, 105291.

Chieochan, O., Saokaew, A., & Boonchieng, E. (2017). IOT for smart farm: A case study of the Lingzhi mushroom farm at Maejo University. In 2017 *14th International Joint Conference on Computer Science and Software Engineering (JCSSE)* (pp. 1-6). IEEE.

Manakitsomboon, H. (2022). Retrieved 25 August, 2022, from https://www.statista.com/topics/5730/agriculture-in-thailand/#dossierKeyfigures

Muangprathub, J., Boonnam, N., Kajornkasirat, S., Lekbangpong, N., Wanichsombat, A., & Nillaor, P. (2019). IoT and agriculture data analysis for smart farm. *Computers and electronics in agriculture*, 156, 467-474.

O'Grady, M. J., & O'Hare, G. M. (2017). Modelling the smart farm. *Information processing in agriculture*, 4(3), 179-187.

Prachi, J., Kancha, J., & Sanjivani, P. (2017). Architecture of Internet of Things (IoT). *International Journal for Scientific Research & Development*, 5(9), 370-372.

Raja, L., & Vyas, S. (2019). The study of technological development in the field of smart farming. In Smart Farming Technologies for Sustainable Agricultural Development (pp. 1-24). IGI Global.

Rose, K., Eldridge, S., & Chapin, L. (2015). The internet of things: An overview. *The internet society (ISOC)*, 80, 1-50.

Suwannarat, P. (2011). Agricultural productivity and poverty reduction in Thailand. Faculty of Economics, Thammasat University, Bangkok, Thailand.

The scientific world (2019). The Importance of Technology in Our Daily Life - How Has Technology Changed Our Lives?. Retrieved on 25 August, 2022, from https://www.scientificworldinfo.com/2019/11/importance-of-technology-in-our-daily-life.html

Wacksbaby (2018). Fritzing Portable. Retrieved 30 August, 2022, from https://sourceforge.net/projects/fritzing-portable/

Xu, X., Liang, W., & Xu, Z. (2014). Remote monitoring cost minimization for an unreliable sensor network with guaranteed network throughput. *Information Processing in Agriculture*, 1(2), 83-94.

Yoon, C., Huh, M., Kang, S. G., Park, J., & Lee, C. (2018). Implement smart farm with IoT technology. In 2018 20th *International Conference on advanced communication technology (ICACT)* (pp. 749-752). IEEE.